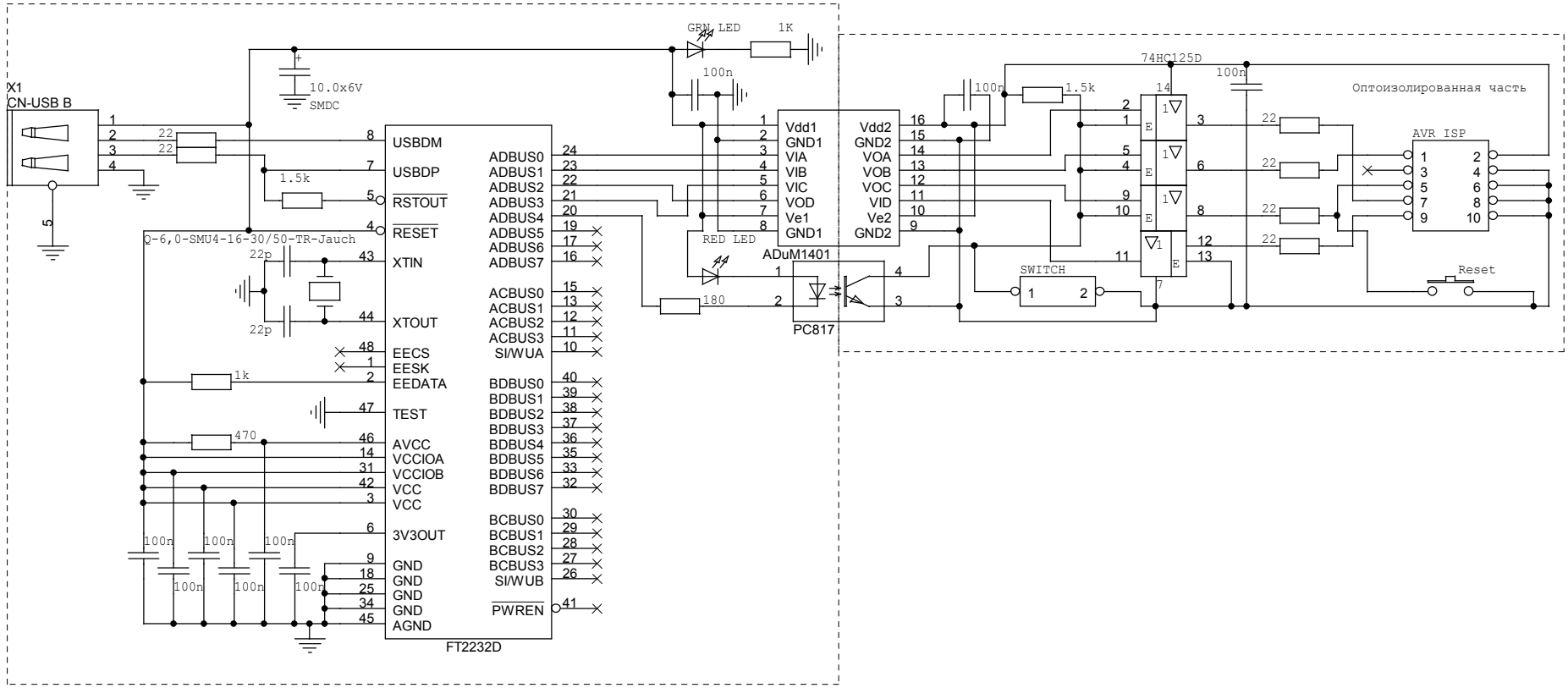
X1
CN-USB B
10.0x6V
SMDC
GRN LED
1K
100n
1.5k
22
22
USBDM
USBDP
RSTOUT
RESET
XTIN
XTOUT
EECS
EESK
EEDATA
TEST
AVCC
VCCIOA
VCCIOB
VCC
VCC
3V3OUT
GND
GND
GND
GND
AGND
ADBUS0
ADBUS1
ADBUS2
ADBUS3
ADBUS4
ADBUS5
ADBUS6
ADBUS7
ACBUS0
ACBUS1
ACBUS2
ACBUS3
SI/WUA
BDBUS0
BDBUS1
BDBUS2
BDBUS3
BDBUS4
BDBUS5
BDBUS6
BDBUS7
BCBUS0
BCBUS1
BCBUS2
BCBUS3
SI/WUB
PWREN
FT2232D
Q-6,0-SMU4-16-30/50-TR-Jauch
22p
22p
1k
470
100n
RED LED
180
Vdd1
GND1
VIA
VIB
VIC
VOD
Ve1
GND1
Vdd2
GND2
VOA
VOB
VOC
VID
Ve2
GND2
ADuM1401
PC817
74HC125D
SWITCH
Оптоизолированная часть
AVR ISP
Reset